Low Noise Amplifier (CSEG7751 Sheet 1 and 2)

The LNA module provides a gain of 49dB over the receive band, with a noise figure of <3.3dB.

Connected to the LNA input is a PIN switch (0.6dB loss) to allow a 20.5dB ENR noise source to be connected for system gain calibration. The first amplifier stage with a gain of 13dB (TR17, with a 1dB gain compression point of about 0dBm) is followed by the second stage with a gain of 12dB (TR18, with a 1dB gain compression point of about 7dBm). The receive signal is then attenuated 4dB (by R69-71), amplified 12.5dB (by TR19, with a 1dB gain compression point of about 15dBm) and attenuated 2dB (by R20-22).

Next the signal passes through a 3.6GHz high pass filter (printed tracks and C40-42) with an insertion loss of 0.9dB, a 3.0GHz low pass filter (printed tracks) with an insertion loss of 1.8dB, the filtering is necessary to meet the out of band blocking requirements that would saturate the mixer.

The signal is then attenuated 3dB (by R54, 55 and 57) and mixed (by IC5, with a conversion loss of 7.0dB) with LO1 Rx. at +10dBm (+13dBm LO input attenuated 3dB by R100-102). The mixer output is attenuated 1dB (by R103-105) before passing through the 947.5MHz IF band pass filter (IC6), with an insertion loss of 4.0dB, this filter defines the pass band.

The first IF amplifier stage has a gain of 16.5dB (TR25, with a 1dB gain compression point of about 10dBm) and it is followed by a temperature compensating PIN diode attenuator (D5 and D7) which has a loss at 25 degC of about 6.5dB (min. loss 1.5dB). This attenuator uses a thermistor based compensation network to counteract the change in gain of the amplifier stages over the temperature range –40 to +85degC.

Next comes another 16.5dB amplifier (TR27, with a 1dB gain compression point of about 10dBm), followed by another PIN diode attenuator (D8 and D10) which is used to set the module gain to 49dB.

The final IF amplifier provides 16.5dB gain (TR30, with a 1dB gain compression point of about 13dBm).

Transient Protection Unit (CSED4536 or CSEG7760)

The LNA output passes via a cable with a 0.2dB loss to the TPU, where it passes through a 950MHz/55.296MHz diplexer network with a loss of 0.3dB. The TPU output connects to the TMU IF/Ref. connector.

Tuning Up

The only adjustments in the receive chain are in the LNA, they are the select on test resistor in the noise diode circuit and the manual gain set potentiometer.

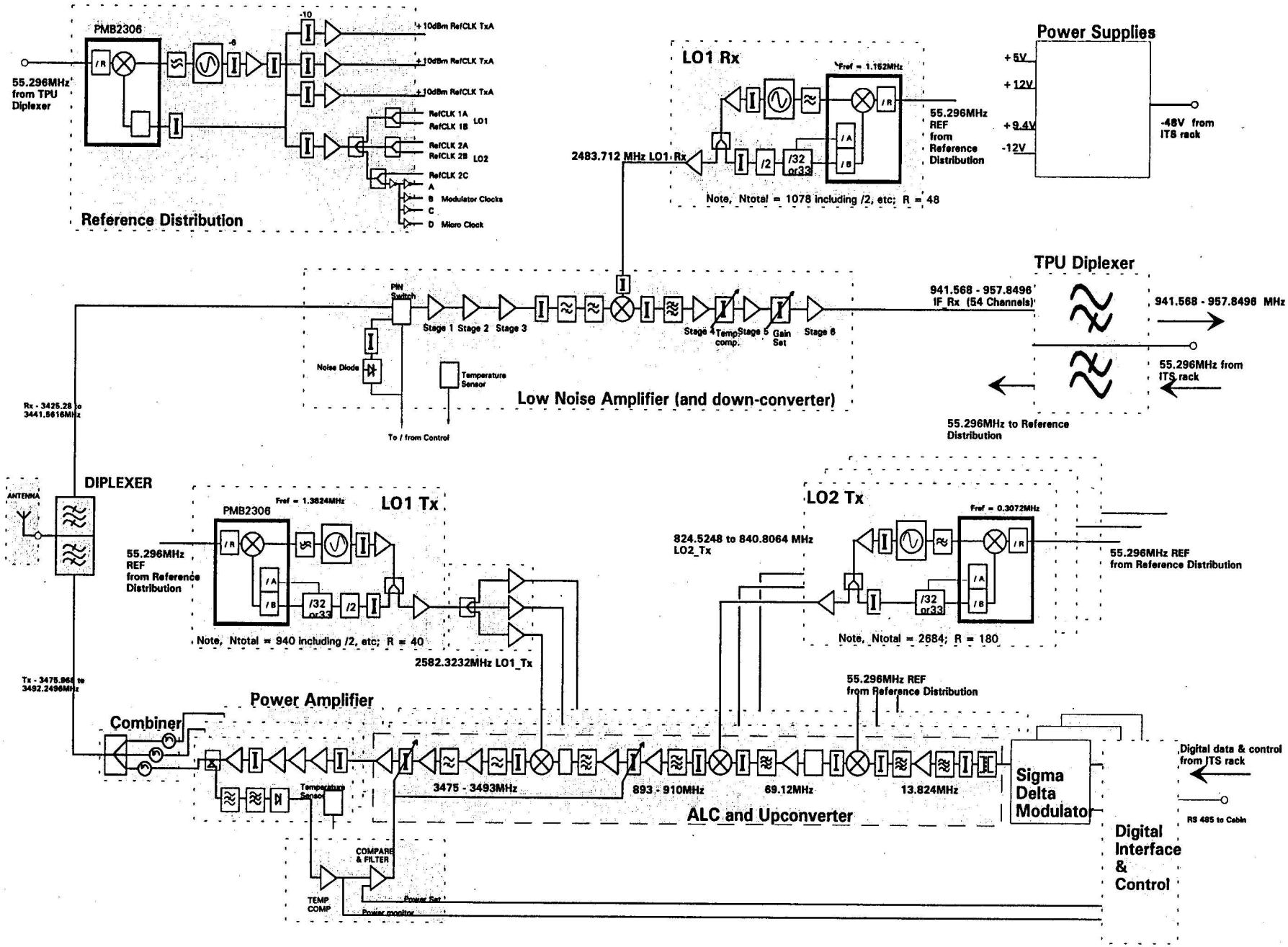

RJB/TMU_50.DRW
28/10/98

TMU BLOCK DIAGRAM 50MHz Duplex